M

## Product description

Hv550 series frequency inverter is high performance inverter for global application with wide voltage input. It can support 220V single phase, 220V 3 phase, 380V 3 phase and 460V 3 phase input voltage.Using advanced current vector control algorithm and better hardware platform HV550 can be widely used in plenty of applications with V/f control, sensorless vector control and close-loop vector control(with PG card). With the advanced design, high quality and reliability, HV550 series inverter will bring the users a whole new experience for all kinds of industrial applications. New design concept for expansion keyboard makes customers more options to meet separate installation from cabinet to machine.

## At a glance

- Advanced motor control technology support both V/f, sensorless vector control and close-loop vector control(only for asynchronous motor)
- V/f control with different input voltage(220V single phase/220V 3 phase/380V 3 phase/460V 3 phase)
- High starting torque characteristics and precise speed control
- Rich and flexible I/O accesses and field bus options

## Customer benefits

- Suitable for all regions which have different grid and voltage
- Upgrade IO can meet more application requirement without controller(PLC) like elevator, textile etc.
- High performance for vector control both in open-loop or close-loop method. Suitable for torque precision control requirements.

### Additional information


Product description.....M-01
At a glance..... M-01
Customer benefits.....M-01
Specificaiton..... M-02
Specificaiton..... M-03
Model Definition.....M-03
Model Definition.....M-04
Model Definition.....M-05
Dimensional Drawing..... M-06
Dimensional Drawing..... M-07
Dimensional Drawing..... M-08
Connection Diagram..... M-08


**www.hncelectric.com/HV550**
For more information, please enter the link or scan the code via mobile devices and get direct access to technical date,manual,application examples and much more.

## Specificaiton

| Items | Specifications | |
|---|---|---|
| Output | Rated Output Voltage | Three phase 380V(Max output voltage is equal to input voltage) |
| | Max continuous current | 100% rated output current |
| | Overload ability | 150% rated current for 1minutes,<br>180% rated current for 5 seconds. |
| | Output frequency | 0Hz~650Hz |
| Input | Rated input voltage | Three phase: 380V±20%, 50~60Hz±5%<br>single-phase or three-phase 220V: ±15%; |
| Control performance | AVR Function | When AVR function is enable, output voltage is stable under input voltage fluctuation |
| | Modulation modes | Optimized space voltage vector PWM modulation |
| | Control mode | Sensorless Vector control; closed-loop vector control; V/F control.;<br>Automatic torque boost |
| | Running command input modes | Panel control, external terminal control, control by serial port of host computer |
| | Speed setting mode | Ten kinds of main frequency setting modes, seven kinds of Auxiliary frequency setting modes. Several combination kinds of main frequency setting modes and Auxiliary frequency setting modes. |
| | Speed setup resolution | Digital setting: 0.01Hz.<br>Analog setting: highest frequency×0.1% |
| | Voltage/Frequency characteristic | Rated voltage: 50-100%,adjustable, Base frequency 50Hz, adjustable, five type V/F curves |
| | Speed control accuracy | Sensorless vector control: ±0.05% rated speed(25℃ ±10℃)<br>closed-loop vector control: ±0.02%(VC) |
| | Speed control range | 1:100 (SVC), 1:1000 (VC) |
| | Starting torque | 0.5Hz/150%(SVC),0.05Hz/180%(VC) |
| | Acc/dec characteristic | 0.1seconds~3000 seconds |
| | Braking torque | 22 kW below: >20% rated torque,<br>30 kW above: >15% rated torque |
| Control I/O signal | Reference voltage output | 1 channel, +10V, 50mA |
| | Control voltage output | 24V,200mA |
| | Analog input | 1 channel, 0~10V/0~20mA DC, 10 bit;<br>1 channel, 0~10 V DC, 10 bit |
| | Programmable terminal input | 7 programmable channels, 30 kinds of functions can be selected, such as Run forward/reverse, Jog forward/reverse, multi-step speed selection, multi-step Acc/Dec time, free run to stop, voltage/current switch, etc. |
| | Open collector output | 1 channel,40 optional running states, the maximum output current is 50mA |
| | Programmable relay output | 1 channel, 40optional running states, contact capacity: 250V AC /3A or 30V DC /1A |
| | Serial port | RS-485 port |

| Items | | Specifications |
|---|---|---|
| Standard function | | Current limiting, torque boost, speed trace, DC braking, restart after power failure, slip compensation, auto fault reset, high/low limit frequency, starting frequency, jump frequency, frequency gain, Carrier frequency adjustment, Acc/Dec mode selection, voltage meter output, current meter output, multi-frequency operation, programming operation, traverse operation, PI close loop operation, proportional control, remote control, FWD/REV dead time, etc. |
| Protection function | | Over voltage, low voltage, over current, current limit, overload, over heat, electronic thermal overload relay, over voltage stall, data protection, etc. |
| Display | 4-digit display (LED) | 15 kinds of parameters, such as frequency setting, output frequency, output voltage, output current, motor speed, output torque, digital value terminals, program menu parameters and 33kinds of Fault codes |
| | Indicator (LED) | Parameter unit, RUN/STOP state, etc. |
| Operating environment | Environment | Inside, low than 1000m, free from dust, corrosive gas and direct sunlight |
| | Ambient temperature | -10℃～+40 ℃ (bare machine: -10℃~+50℃), 20%～90%RH, no condensing |
| | Vibration | Lower than 0.5g |
| | Storage temperature | -25℃~+65℃ |
| | Installation | Wall mounted or surface mounted inside a cabinet |
| Protection class | | Ip20 |
| Cooling | | 0.75 kW and below: enclosed self-cooling<br>Others: forced cooling. |

M

## Model Definition

**HV 550 - R75 G3**

| Code | Voltage |
|---|---|
| G1 | single phase 220V |
| G2 | 3 phase 220V |
| G3 | 3 phase 380V |
| G4 | 3 phase 460V |

| Code | Matching motor |
|---|---|
| R75 | 0.75kW |
| 015 | 15kW |

HV 550 Series Inverter

| Frequency Inverter Model | Input Voltage | Rated Output Power(kW) | Rated Input Current (A) | Rated Output Current (A) | Adaptive Motor |
|---|---|---|---|---|---|
| HV550-R40G1 | single-phase220V ±15% | 0.4 | 5.5 | 2.6 | 0.4 |
| HV550-R75G1 | | 0.75 | 9.2 | 4.5 | 0.75 |
| HV550-1R5G1 | | 1.5 | 14.5 | 7.5 | 1.5 |
| HV550-2R2G1 | | 2.2 | 23 | 10 | 2.2 |
| HV550-004G1 | | 4.0 | 35.0 | 16.0 | 4.0 |
| HV550-R40G2 | three-phase220V ±15% | 0.4 | 2.9 | 2.6 | 0.4 |
| HV550-R75G2 | | 0.75 | 5 | 4.5 | 0.75 |
| HV550-1R5G2 | | 1.5 | 8 | 7.5 | 1.5 |
| HV550-2R2G2 | | 2.2 | 11 | 10 | 2.2 |
| HV550-004G2 | | 4.0 | 17.0 | 16.0 | 4.0 |
| HV550-5R5G2 | | 5.5 | 21.0 | 20.0 | 5.5 |
| HV550-7R5G2 | | 7.5 | 31.0 | 30.0 | 7.5 |
| HV550-011G2 | | 11 | 43.0 | 42.0 | 11 |
| HV550-015G2 | | 15 | 56.0 | 55.0 | 15 |
| HV550-018G2 | | 18.5 | 71.0 | 70.0 | 18.5 |
| HV550-022G2 | | 22 | 81.0 | 80.0 | 22 |
| HV550-030G2 | | 30 | 112.0 | 110.0 | 30 |
| HV550-R75G3 | three-phase380V ±15% | 0.75 | 3.5 | 2.5 | 0.75 |
| HV550-1R5G3 | | 1.5 | 6.2 | 3.8 | 1.5 |
| HV550-2R2G3 | | 2.2 | 9.2 | 5.5 | 2.2 |
| HV550-004G3 | | 4.0 | 14.9 | 9 | 4.0 |
| HV550-5R5G3 | | 5.5 | 21.5 | 13 | 5.5 |
| HV550-7R5G3 | | 7.5 | 27.9 | 17 | 7.5 |
| HV550-011G3 | | 11 | 39 | 24 | 11 |
| HV550-015G3 | | 15 | 50.3 | 30 | 15 |
| HV550-018G3 | | 18.5 | 60 | 39 | 18.5 |
| HV550-220G3 | | 22 | 69.3 | 45 | 22 |
| HV550-030G3 | | 30 | 86 | 60 | 30 |
| HV550-037G3 | | 37 | 104 | 75 | 37 |
| HV550-045G3 | | 45 | 124 | 91 | 45 |
| HV550-055G3 | | 55 | 150 | 112 | 55 |
| HV550-075G3 | | 75 | 201 | 150 | 75 |
| HV550-090G3 | | 90 | 160 | 176 | 90 |
| HV550-110G3 | | 110 | 196 | 210 | 110 |
| HV550-132G3 | | 132 | 232 | 253 | 132 |
| HV550-160G3 | | 160 | 282 | 304 | 160 |
| HV550-185G3 | | 185 | 330 | 340 | 185 |
| HV550-200G3 | | 200 | 352 | 380 | 200 |
| HV550-220G3 | | 220 | 385 | 426 | 220 |
| HV550-250G3 | | 250 | 460 | 470 | 250 |
| HV550-280G3 | | 280 | 491 | 520 | 380 |
| HV550-315G3 | | 315 | 552 | 585 | 315 |
| HV550-355G3 | | 355 | 624 | 650 | 355 |

| Frequency Inverter Model | Input Voltage | Rated Output Power(kW) | Rated Input Current (A) | Rated Output Current (A) | Adaptive Motor |
|---|---|---|---|---|---|
| HV550-400G3 | | 400 | 704 | 730 | 400 |
| HV550-450G3 | | 450 | 792 | 830 | 450 |
| HV550-500G3 | | 500 | 835 | 860 | 500 |
| HV550-560G3 | | 560 | 920 | 950 | 560 |
| HV550-630G3 | | 630 | 1050 | 1100 | 630 |
| HV550-R75G4 | | 0.75 | 2.9 | 2.1 | 0.75 |
| HV550-1R5G4 | | 1.5 | 5.1 | 3.2 | 1.5 |
| HV550-2R2G4 | | 2.2 | 7.6 | 4.6 | 2.2 |
| HV550-4R0G4 | | 4.0 | 12.4 | 7.5 | 4.0 |
| HV550-5R5G4 | | 5.5 | 18 | 11 | 5.5 |
| HV550-7R5G4 | | 7.5 | 23 | 14 | 7.5 |
| HV550-011G4 | | 11 | 32 | 20 | 11 |
| HV550-015G4 | | 15 | 42 | 25 | 15 |
| HV550-018G4 | | 18.5 | 50 | 32 | 18.5 |
| HV550-022G4 | | 22 | 58 | 37 | 22 |
| HV550-030G4 | | 30 | 71 | 50 | 30 |
| HV550-037G4 | | 37 | 86 | 62 | 37 |
| HV550-045G4 | | 45 | 103 | 76 | 45 |
| HV550-055G4 | | 55 | 125 | 93 | 55 |
| HV550-075G4 | three-phase460V ±15% | 75 | 167 | 125 | 75 |
| HV550-090G4 | | 90 | 133 | 146 | 90 |
| HV550-110G4 | | 110 | 163 | 174 | 110 |
| HV550-132G4 | | 132 | 193 | 210 | 132 |
| HV550-160G4 | | 160 | 234 | 252 | 160 |
| HV550-185G4 | | 185 | 274 | 282 | 185 |
| HV550-200G4 | | 200 | 292 | 315 | 200 |
| HV550-220G4 | | 220 | 320 | 354 | 220 |
| HV550-250G4 | | 250 | 382 | 390 | 250 |
| HV550-280G4 | | 280 | 408 | 432 | 380 |
| HV550-315G4 | | 315 | 458 | 486 | 315 |
| HV550-355G4 | | 355 | 518 | 540 | 355 |
| HV550-400G4 | | 400 | 584 | 606 | 400 |
| HV550-450G4 | | 450 | 657 | 689 | 450 |
| HV550-500G4 | | 500 | 693 | 714 | 500 |
| HV550-560G4 | | 560 | 764 | 789 | 560 |
| HV550-630G4 | | 630 | 875 | 913 | 630 |

## Dimensional Drawing

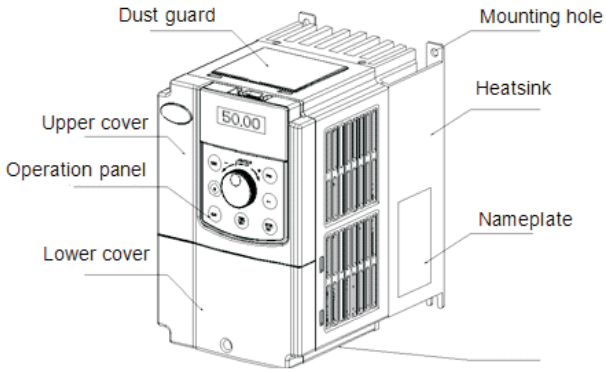


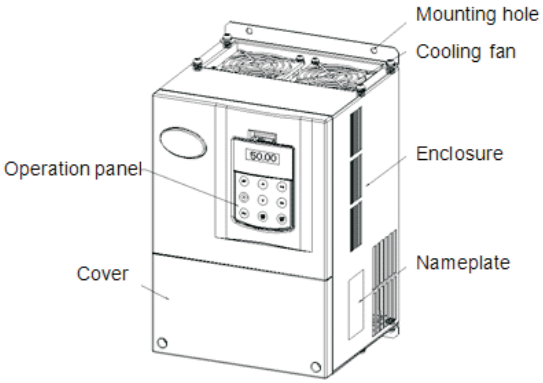


Product component name

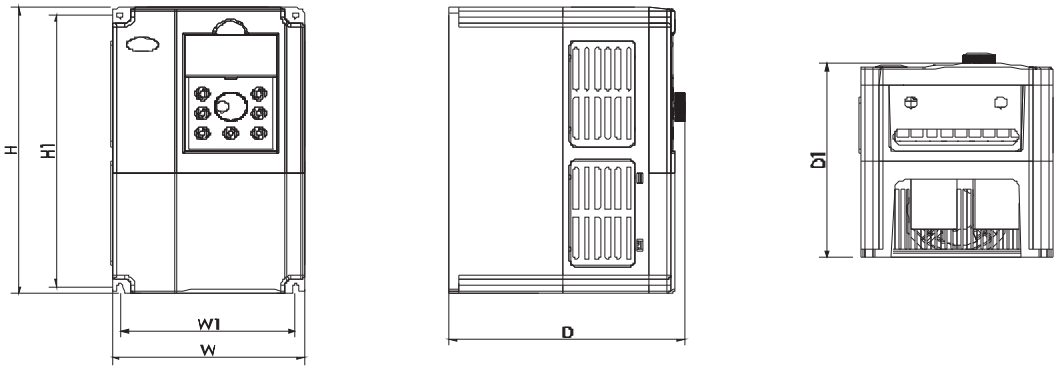


HV550-R40G1～HV550-2R2G1、HV550-R75G3~HV550-7R5G3 and below power class

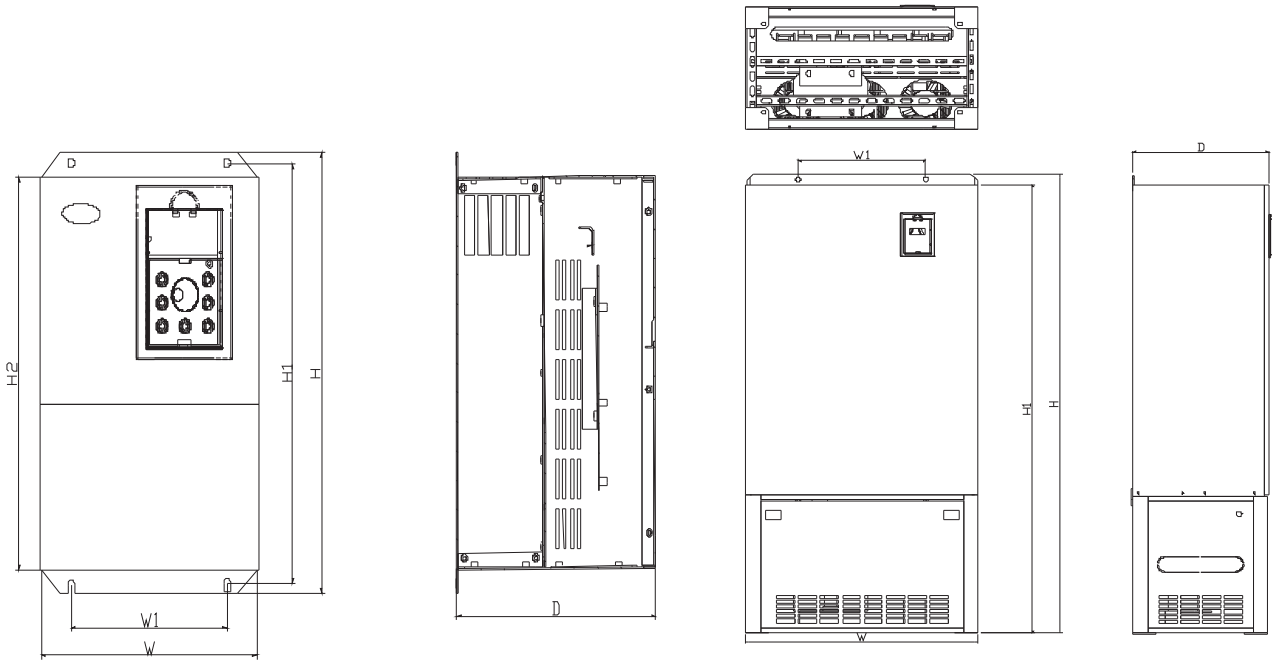


HV550-011G3~HV550-022G3 power class

HV550-185G3~HV550-400G3

| Voltage class | Inverter model | Outline and mounting dimension (mm) | | | | | | | Mounting hole diameter | Approximate weight (kg)) |
|---|---|---|---|---|---|---|---|---|---|---|
| | | W | D | H | H1 | W1 | D1 | H2 | | |
| single phase 220V | HV550-R40G1/R75G1 | 118.5 | 185 | 159 | 106.5 | 174.5 | 150 | | 5.5 | 2.0 |
| | HV550-1R5G1<br>HV550-2R2G1 | | | | | | | | | |
| | HV550-004G1 | 150 | 258 | 183.8 | 136.8 | 245 | 175.3 | | 5.5 | 4.5 |
| three phase 400V | HV550-R75G3 | 118.5 | 185 | 159 | 106.5 | 174.5 | 150 | | 5.5 | 2.0 |
| | HV550-1R5G3 | | | | | | | | | |
| | HV550-2R2G3 | | | | | | | | | |
| | HV550-004G3 | 118.5 | 195 | 169 | 106.5 | 184.5 | 160 | | 5.5 | 3.0 |
| | HV550-5R5G3 | 150 | 258 | 183.8 | 136.8 | 245 | 175.3 | | 5.5 | 4.5 |
| | HV550-7R5G3 | | | | | | | | | |
| | HV550-011P3 | 210 | 337 | 191 | 150 | 322.5 | | 298 | 7 | 8.5 |
| | HV550-011G3 | | | | | | | | | |
| | HV550-015G3 | | | | | | | | | |
| | HV550-018G3 | 285 | 501 | 230.2 | 200 | 482 | | 460 | 7 | 17 |
| | HV550-022G3 | | | | | | | | | |
| | HV550-030G3 | | | | | | | | | |
| | HV550-037G3 | 352 | 585 | 274.2 | 220 | 559 | | 538 | 10 | 25 |
| | HV550-045G3 | | | | | | | | | |
| | HV550-055G3 | | | | | | | | | |
| | HV550-075P3 | 404 | 680 | 302.7 | 300 | 658 | | 633 | 10 | 35 |
| | HV550-075G3 | | | | | | | | | |
| | HV550-090G3 | 485 | 760 | 319 | 325 | 739 | | 713 | 12 | 55 |
| | HV550-110G3 | | | | | | | | | |
| | HV550-132G3 | 533 | 830 | 371.7 | 325 | 809 | | 780 | 12 | 85 |
| | HV550-160G3 | | | | | | | | | |
| | Wall Mounted | 638 | 1010 | 374 | 350 | 985 | | 950 | 14 | 125 |
| | HV550-185G3 | | | | | | | | | |
| | HV550-200G3 | | | | | | | | | |
| | HV550-220G3 | | | | | | | | | |
| | Cabinet | 638 | 1402 | 374 | 350 | 1372 | | | 14 | 140 |
| | HV550-185G3 | | | | | | | | | |
| | HV550-200G3 | | | | | | | | | |
| | HV550-220G3 | | | | | | | | | |
| | Wall Mounted | 700 | 1240 | 460 | 520 | 1207.5 | | 1168 | 14 | 150 |
| | HV550-250G3 | | | | | | | | | |
| | HV550-280G3 | | | | | | | | | |
| | HV550-315G3 | | | | | | | | | |
| | Cabinet | 700 | 1627 | 460 | 520 | 1592 | | | 14 | 180 |
| | HV550-250G3 | | | | | | | | | |
| | HV550-280G3 | | | | | | | | | |
| | HV550-315G3 | | | | | | | | | |
| | HV550-355P3 | 800 | 1772 | 460 | 520 | 1737 | | | 14 | 215 |
| | HV550-355G3 | | | | | | | | | |
| | HV550-400G3 | | | | | | | | | |

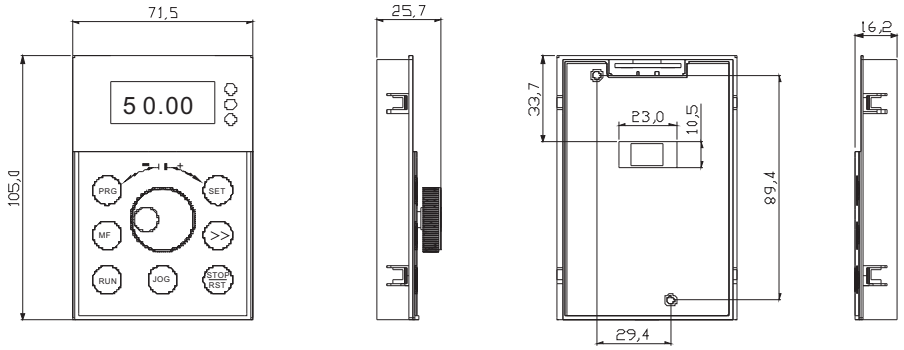


Operation panel outline and mounting dimension
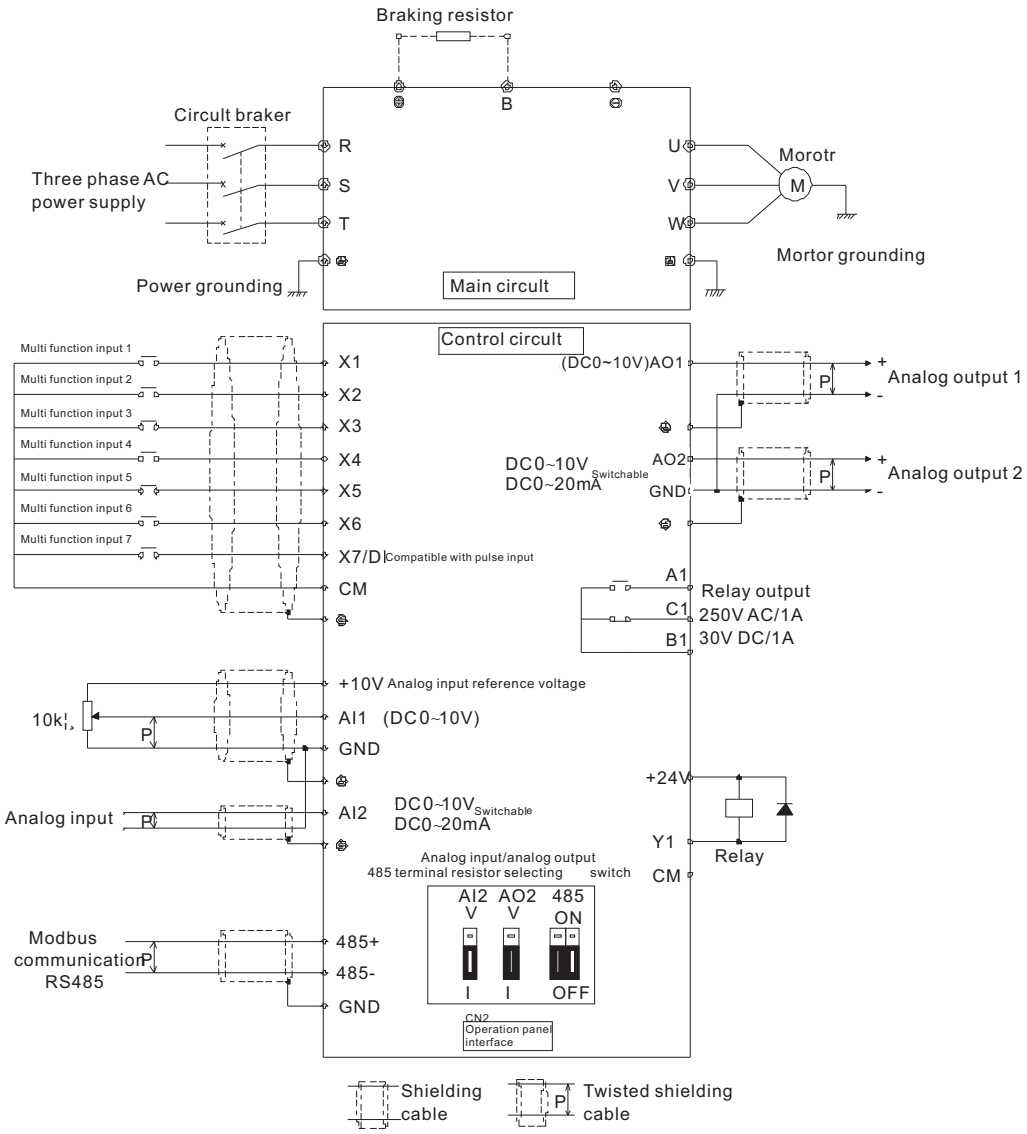
## Connection Diagram